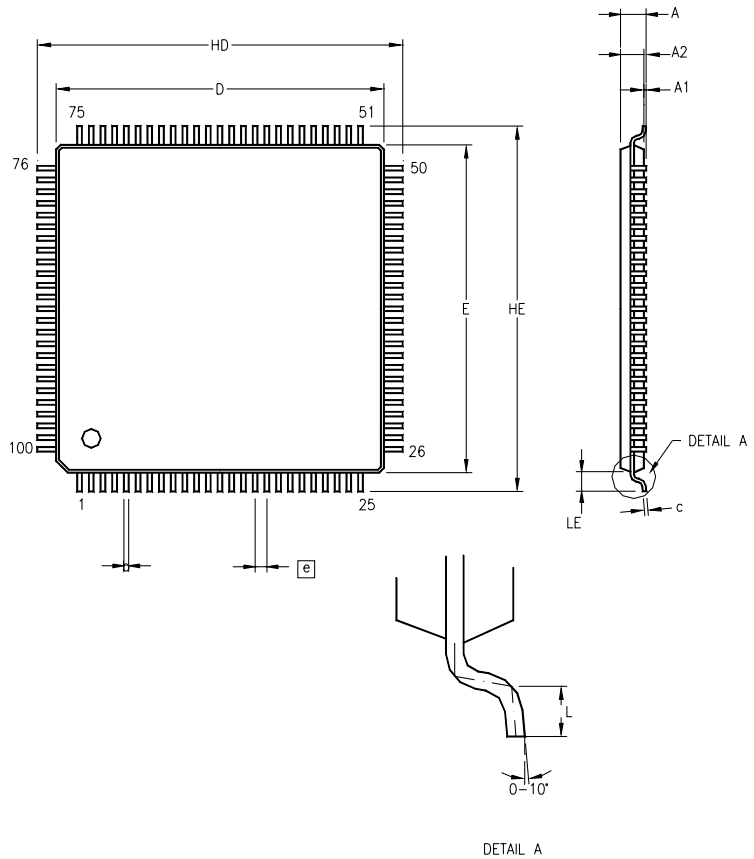

SYMBOL	MILLIMETER		INCH	
	MIN	MAX	MIN	MAX
A	1.35	1.60	.053	.063
A1	0.05	0.20	.002	.008
A2	1.30	1.50	.051	.059
b	0.15	0.26	.006	.010
c	0.10	0.20	.004	.008
HD	15.85	16.15	.624	.636
D	13.90	14.10	.547	.555
HE	15.85	16.15	.624	.636
E	13.90	14.10	.547	.555
e	0.50 BSC		.0197 BSC	
L	0.35	0.65	.014	.026
LE	0.90	1.10	.035	.043

1. CONTROLLING DIMENSIONS : MM
2. MAX COPLANARITY : .10mm / .004"

Figure 21. 100-Lead Plastic Low-Profile Quad Flat Package