Board Design Information

Figure 17 displays the schematics for the ZMOTION 20-Pin Development Board.

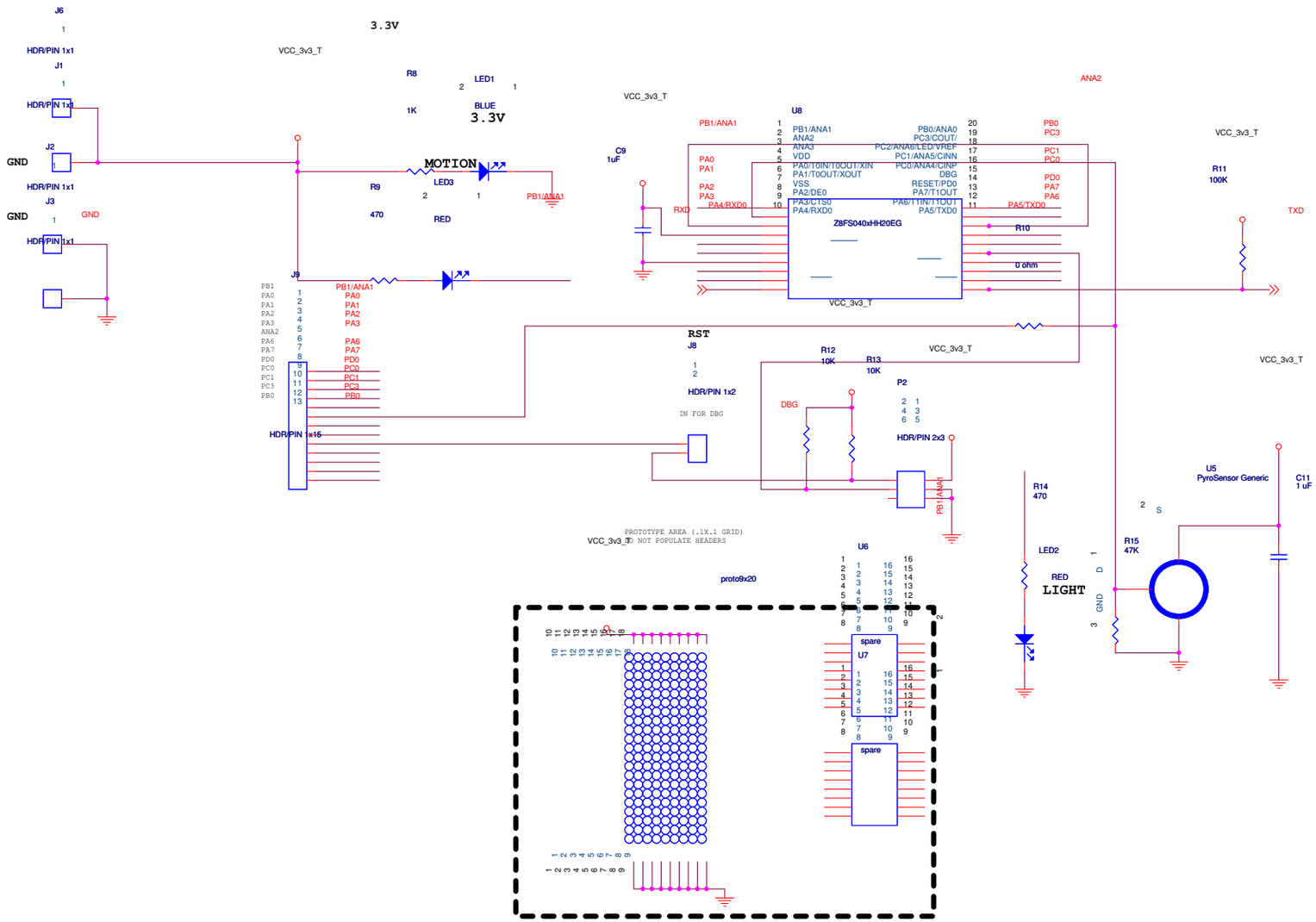

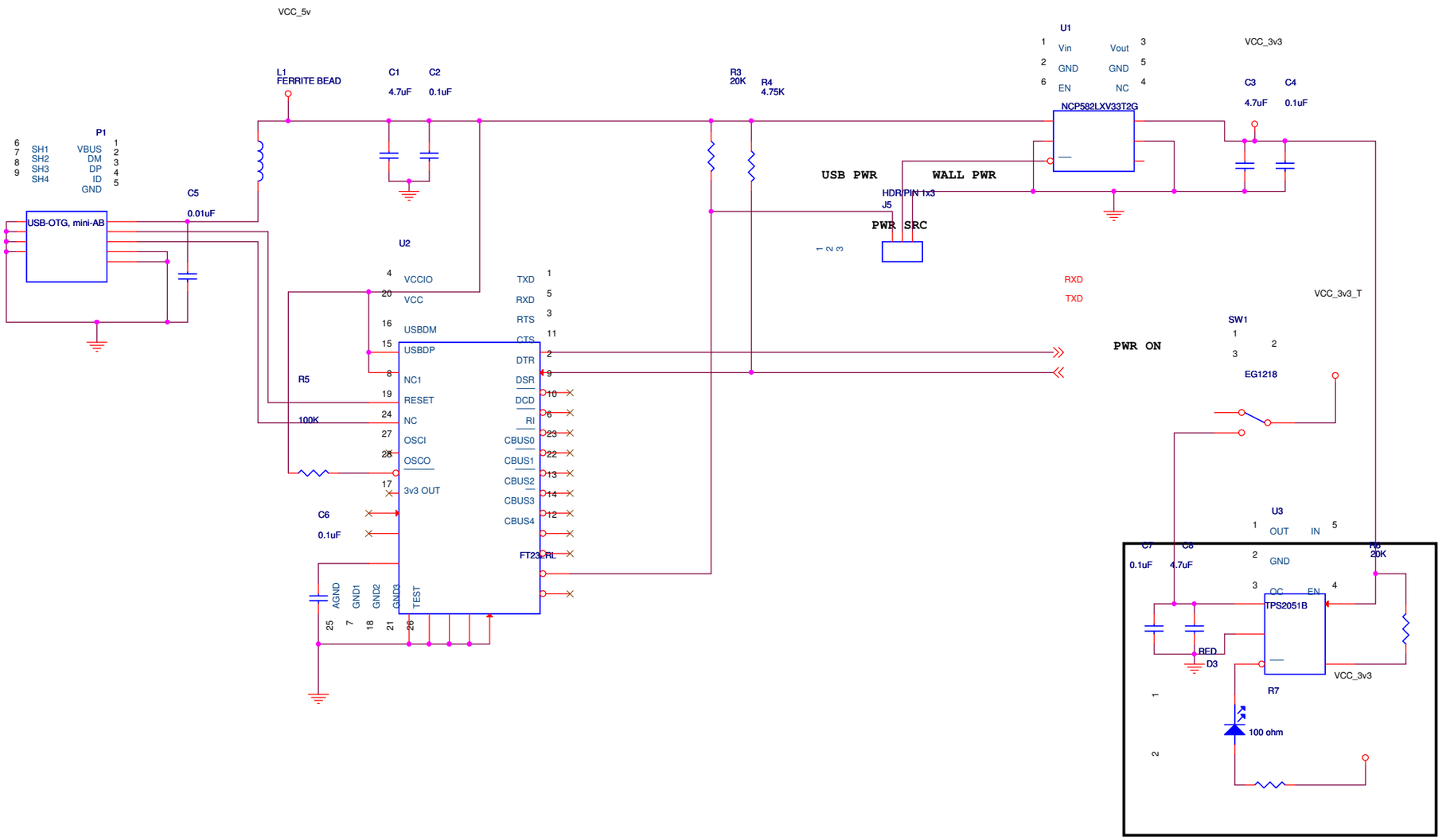
VCC_5v
L1
FERRITE BEAD
C1
4.7uF
C2
0.1uF
R3
20K
R4
4.75K
U1
Vin
Vout
GND
GND
EN
NC
NCP582LXV33T2G
VCC_3v3
C3
4.7uF
C4
0.1uF
P1
SH1
SH2
SH3
SH4
VBUS
DM
DP
ID
GND
USB-OTG, mini-AB
C5
0.01uF
USB PWR
WALL PWR
HDR/PIN 1x3
J5
PWR SRC
U2
VCCIO
VCC
USBDM
USBDP
NC1
RESET
NC
OSCI
OSCO
3v3 OUT
TXD
RXD
RTS
CTS
DTR
DSR
DCD
RI
CBUS0
CBUS1
CBUS2
CBUS3
CBUS4
FT232RL
RXD
TXD
VCC_3v3_T
PWR ON
SW1
EG1218
R5
100K
C6
0.1uF
AGND
GND1
GND2
GND3
TEST
U3
OUT
IN
GND
OC
EN
TPS2051B
C7
0.1uF
C8
4.7uF
R6
20K
RED
D3
VCC_3v3
R7
100 ohm